DINB100-SA v2

EN

Standalone Biometric Reader

USER'S MANUAL

v.d1

CONTENTS

1. INTRODUCTION

DINB100-SA v2 is access control fingerprint reader designed for easy management of the users and configuration. The scanner is made with advanced capacitive sensing technology that provides some advantages over optical solutions like:
- making almost impossible to make fake copy of the users fingers
- same performance in the different light conditions
- good reading of fingers with stains from daily jobs

Built in strong scanning and matching algorithm provides excellent tolerance in the way finger is swiped over the sensor reducing to minimum the need to repeat finger swiping at the sensor.
The reader can store up to 100 finger templates. One template is reserved for User manager (Administrator), one template is reserved for Reader configuration (Installer) and up to 98 templates are for Users.

RECOMMENDATIONS

Consult with installer about safety level of the installation. There are devices with relays compatible with this reader that can increase the security of the system if needed. One or two enrolled fingers are enough for one user. Ask the installer before he leaves the site to enroll your finger as administrator.

NOTES

The Reader is using physical roughness of the fingerprint to scan the finger. Some of the users may have very flat fingertips, making difficult for the sensor to recognize correctly the fingerprint. In most cases, these are children and older persons. To solve this problem, do the following:
1. Try with different user's fingers to find the "best" finger.
2. Check with the installer other models of the reader with added card reader or keypad for other type of access.

MAINTENANCE

No special or periodic maintenance is required. If cleaning is needed, use soft wet cloth and wipe gently the dirt. Do not use chemicals and materials that can scratch the sensor.

WARNING!

Do not touch the sensor with other objects than finger. Do not pour or splash with water or other liquids. When painting or construction work is ongoing in the area around the reader, protect the reader sensor area from possible damages and paint. If reader is to be dismounted or relocated, call authorized installer for the job. Disposal of this product must be handled according to all national laws and regulations.

2. MOUNTING

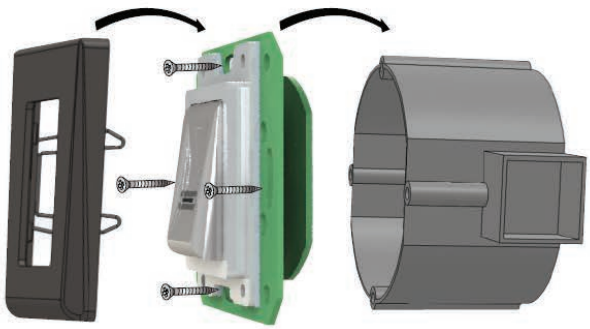

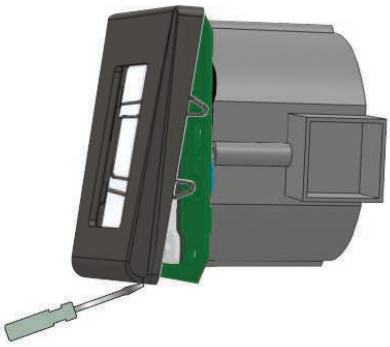

Do not install the device and cabling close to a source of strong electro-magnetic fields like radio-transmitting antenna.
Do not place the device near or above heating equipments.
If cleaning, do not spray or splash water or other cleaning liquids but wipe it out with smooth cloth or towel.
Do not let children touch the device without supervision.
Note that if the sensor is cleaned by detergent, benzene or thinner, the surface will be damaged and the fingerprint can't be entered.

The operating temperature of the product is between -20ºC - + 50ºC. If the reader is installed in an environment where the temperature can drop below -10ºC or/and if the sensor could only be exposed to direct sunlight, it is strongly recommended to install the reader inside a third party sealed wall mount box (fitted with additional heater if very low temperature) to keep a constant sensor level performance. XPR™ cannot guarantee the functionality of the product if measures and advice before are not followed.
It is also strongly recommended to use double technology biometric readers when use outdoor to offer first higher security but also the possibility to use different readers depending on users.

3. SPECIFICATIONS

Fingerprint Capacity:	98 templates
Output:	1 x Relay (2 A /24V AC/DC)
Push Button Input:	Yes
Door Open Time:	Pulse (1 to 30 seconds) or Toggle(ON/OFF)
Entry Mode:	Finger (basic installation) Finger or Card (when used with card reader DIN Card reader) Finger or PIN code (when used with keypad DINPAD-M)
Programming:	By swiping
Admin/Installer Fingers:	1 Administrator and 1 Installer Finger
Backlight ON/OFF:	Yes
Buzzer ON/OFF:	Yes
Firmware upgrade:	via RS-485 converter and windows application
Current Consumption:	100 mA max.
Power Supply:	9-14 V DC
Indication:	Tricolor Status LED
IP Factor:	IP40
Storage/Operating Temperature :	-20°C to +50°C
Storage/Operating Humidity:	5% to 93% RH without condensation
Dimensions(mm):	80 x 80 x 9

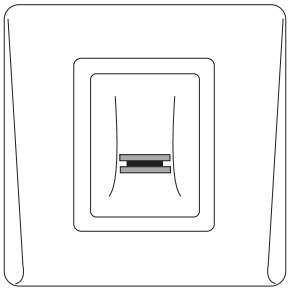

DINB100-SA v2

4. APPLICATION DIAGRAM

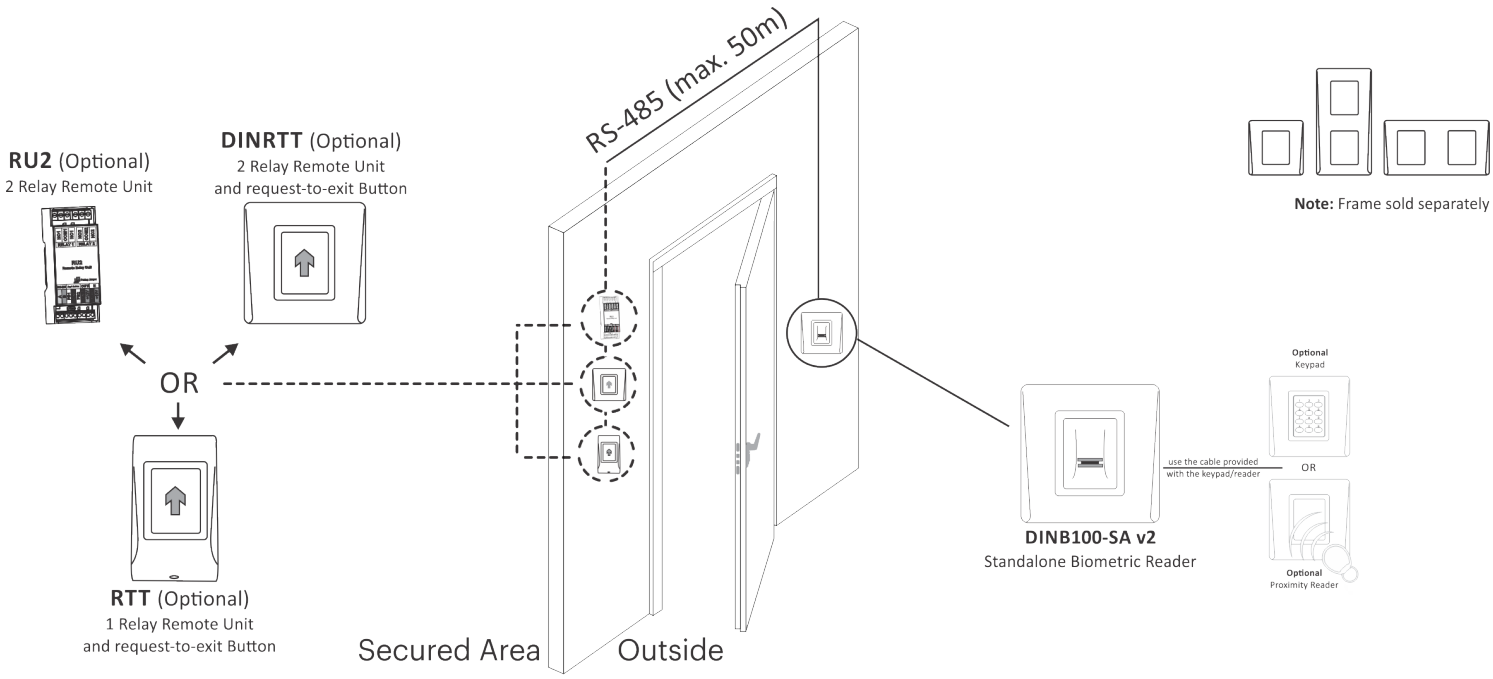

5. RECOMMENDED SWIPING TECHNIQUE

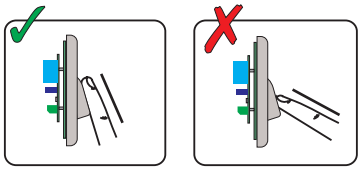

Follow the below instructions for correct finger swiping. Starting from the first finger joint, place the selected finger on the swipe sensor and move it evenly towards oneself in one steady movement.

Result:

For a valid swipe: Tricolour Status LED turns green + OK Beep(short + long beep)

For an invalid or misread swipe: Tricolour Status LED turns red + Error Beep (3 short beeps)

6. INDICATION

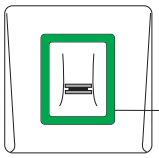

Tricolor Status **LED**
Green - Access Granted
Red - Access denied
Orange - Idle Mode

OK Beep - short + long beep
Error Beep - 3 short beeps
Swipe Finger - 2 short beeps

7. WIRING

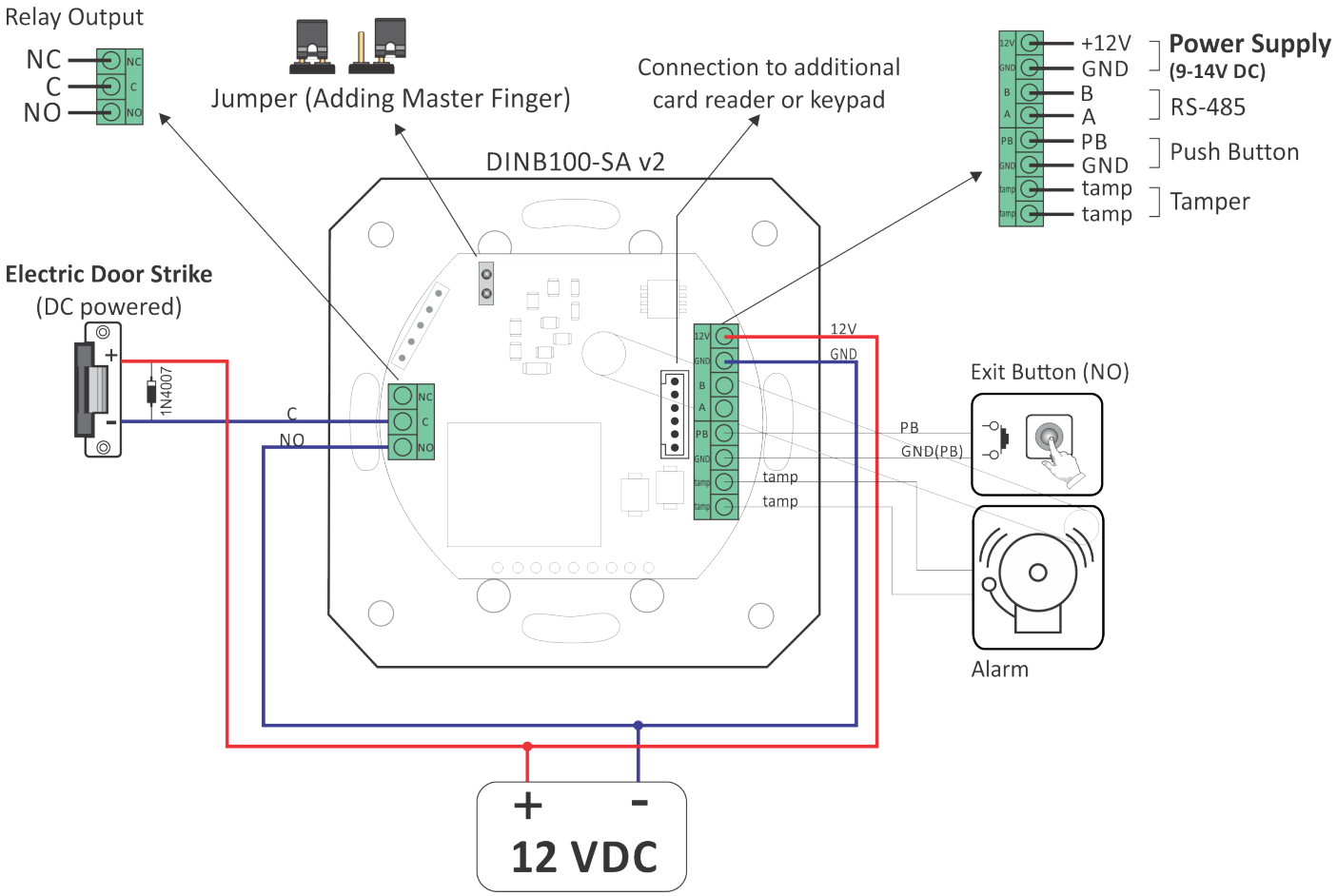

8. ADDING ADMIN FINGER

1. Close the jumper on the back of the device.

2. Reset the Power of the device.

3. Wait for One long + multiple short beeps

4. Open the jumper. (short beeps will stop)

5. Wait for about **15 seconds** for the LED to blink in **Orange**.

6. Swipe the Master finger **min.6 times.** (Until Ok Beep)

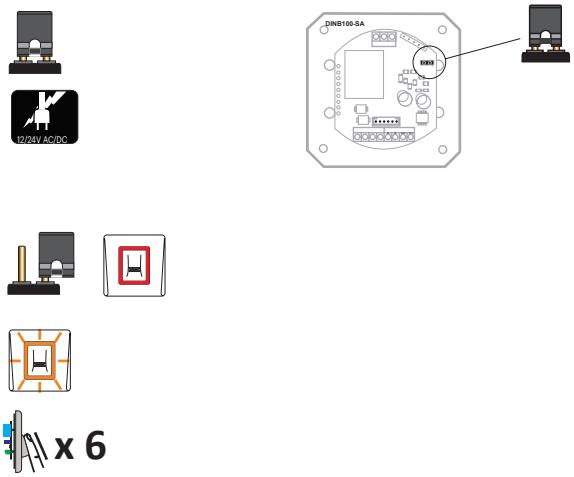

Warning: *This procedure also deletes all the users and the installer finger.*
Warning: *This procedure will unpair the connected relay unit (RTT, DINRTT or RU2)*

9. PAIRING - BIOMETRIC READER AND REMOTE RELAY UNIT

If secure installation is needed, the reader can be connected to remote relay unit at secured area, which also can play the role of request-to-exit push button. Follow the instructions bellow to pair(couple) both devices or refer to the Remote Relay's Manual.

Pairing DINB100-SA with DINRTT

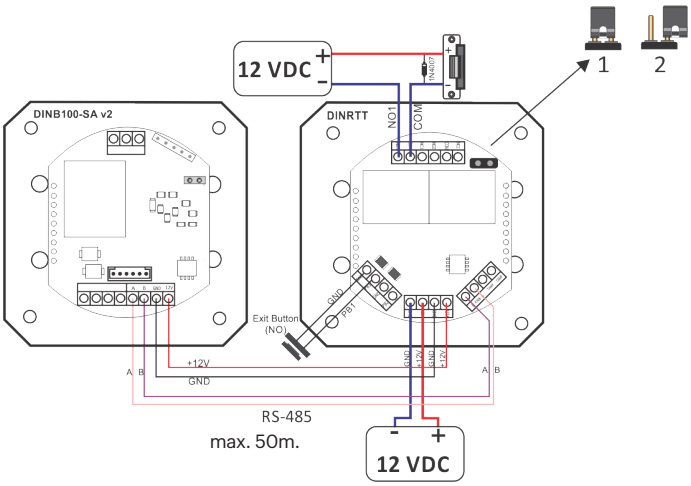

1. Close the Jumper. DINRTT beeps continuously and the red led blinks.

2. Open the Jumper

3. Wait for Beep + OK Beep (short + short + long beep)

After the OK beep, the coupling is done.

Pairing DINB100-SA with RTT

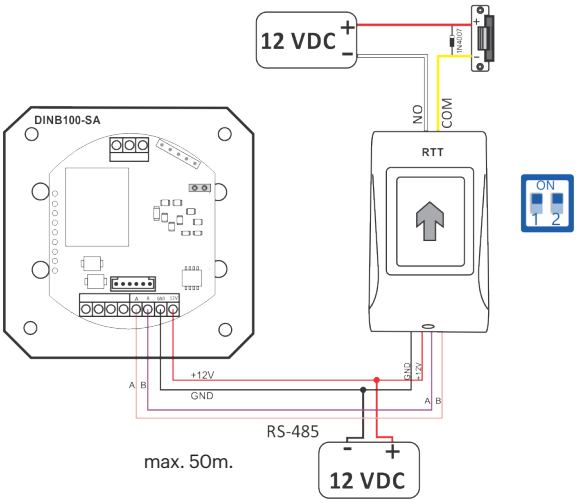

1. Put Dipswitch No.1 to position ON. RTT beeps continuously and the red ledblinks.

2. Put Dipswitch No.1 to position OFF.

3. Wait for Beep + OK Beep (short + short + long beep)

After the OK beep, the coupling is done.

Pairing DINB100-SA with RU2

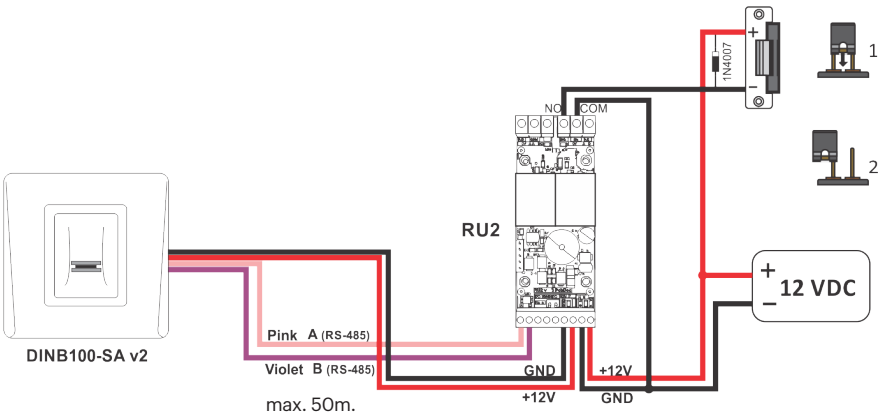

1. Put the Jumper to closed position. RU2 beeps continuously and the red led blinks.

2. Put the Jumper to open position.

3. Wait for Beep + OK Beep (short + short + long beep)

After the OK beep, the coupling is done.

Warning: Changing the ADMIN finger will also unpair the remote relay unit.

10. ADMINISTRATOR PROGRAMMING

Use point fingers as Administrator and Installer. You can use the other fingers as access fingers.
Administrator finger is enrolled at the end of the system installation. Initial enrollment of the Admin finger is described in installer manual.

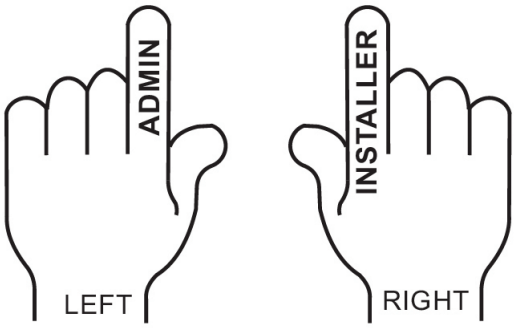

ADD Finger Relay 1 (Finger that will activate relay 1)

Action	*Finger*	*Backlight*	*Buzzer Sound*
Swipe Admin Finger 1 time	x 1	slow blinking	short beep
Wait 5 seconds (until fast blinking)			short beep
Swipe User Finger min. 6 times (until short + long beep)	x 6	fast blinking	short + long beep

or

Present card/tag 1 time	x 1	fast blinking	short + long beep

ADD Finger Relay 2 (Finger that will activate relay 2)

Action	*Finger*	*Backlight*	*Buzzer Sound*
Swipe Admin Finger 2 times	x 2	slow blinking	short beep
Wait 5 seconds (until fast blinking)			short beep
Swipe User Finger min. 6 times (until short + long beep)	x 6	fast blinking	short + long beep

or

Present card/tag 1 time	x 1	fast blinking	short + long beep

Relay 2 is available if the reader is used with remote relay unit with 2 relays(DINRTT and RU2). Consult the installer if Relay 2 is available in your system.

ADD Finger Relay 1&2 (Finger that will activate relay 1&2)

Action	*Finger*	*Backlight*	*Buzzer Sound*
Swipe Admin Finger 3 times	x 3	slow blinking	short beep
Wait 5 seconds (until fast blinking)			short beep
Swipe User Finger min. 6 times (until short + long beep)	x 6	fast blinking	short + long beep

or

Present card/tag 1 time	x 1	fast blinking	short + long beep

Relay 2 is available if the reader is used with remote relay unit with 2 relays(DINRTT and RU2). Consult the installer if Relay 2 is available in your system.

DELETE Finger

Action	*Finger*	*Backlight*	*Buzzer Sound*
Swipe Admin Finger 4 times	x 4	slow blinking	short beep
Wait 5 seconds (until fast blinking)			short beep
Swipe User Finger	x1	fast blinking	short + long beep

or

Present card/tag 1 time	x 1	fast blinking	short + long beep

DELETE ALL Fingers and Cards

Action	*Finger*	*Backlight*	*Buzzer Sound*
Swipe Admin Finger 4 times	x 4	slow blinking	short beep
Wait 5 seconds (until fast blinking)		slow blinking	short beep
Swipe Admin Finger 2 times	x2	fast blinking	multiple beeps

CHANGE ADMIN Finger

Action	*Finger*	*Backlight*	*Buzzer Sound*
Swipe Admin Finger 5 times	x 5	slow blinking	short beep
Wait 5 seconds (until fast blinking)		slow blinking	short beep
Swipe NEW Admin Finger min.6 times	x6	fast blinking	short + long beep

CHANGE INSTALLER Finger

Action	*Finger*	*Backlight*	*Buzzer Sound*
Swipe Admin Finger 6 times	x 6	slow blinking	short beep
Wait 5 seconds (until fast blinking)		slow blinking	short + long beep
Swipe NEW Installer Finger min.6 times	x6	fast blinking	3 short beeps

CONNECTING DINB100 WITH DINMTPX PROXIMITY READER

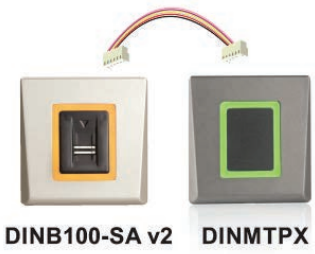

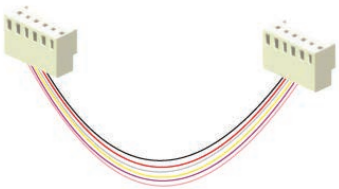

Connect both devices with the cable provided. The proximity reader will be powered via that cable. No extra power supply for the proximity reader is needed. Once connected, no further settings are needed.

ADMINISTRATOR PROGRAMMING BLOCK DIAGRAM

Swipe the **ADMIN** Finger 1 to 6 times depending of the desired menu

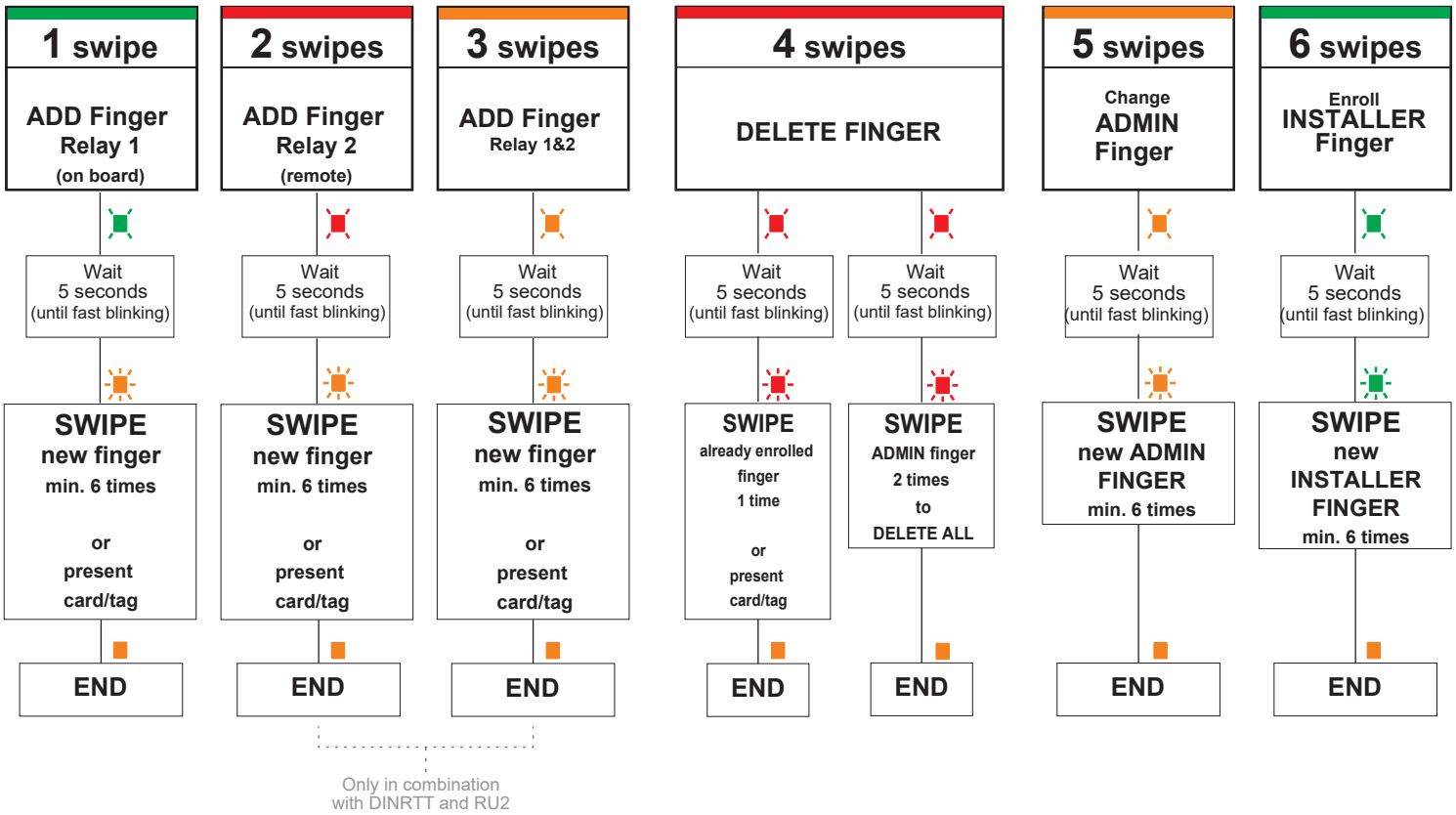

11. INSTALLER PROGRAMMING

Set Relay 1 Time

Action	*Finger*	*Backlight*	*Buzzer Sound*
Swipe Installer Finger 1 time	x1	slow blinking	short beep
Wait 5 seconds (until fast blinking)			short beep
Swipe the INSTALLER Finger and start counting seconds	x1	fast blinking	beeps on 1 second
Swipe the INSTALLER Finger to stop or wait 30 seconds to put the relay in toggle mode	x1	fast blinking	short + long beep

Set Relay 2 Time

Action	*Finger*	*Backlight*	*Buzzer Sound*
Swipe Installer Finger 2 times	x2	slow blinking	short beep
Wait 5 seconds (until fast blinking)			short beep
Swipe the INSTALLER Finger and start counting seconds	x1	fast blinking	beeps on 1 second
Swipe the INSTALLER Finger to stop or wait 30 seconds to put the relay in toggle mode	x1	fast blinking	short + long beep

Relay 2 is available if the reader is used with remote relay unit with 2 relays(DINRTT and RU2). Consult the installer if Relay 2 is available in your system.

BUZZER ON/OFF

Action	*Finger*	*Backlight*	*Buzzer Sound*
Swipe Installer Finger 3 times	x3	slow blinking	short beep
Wait 5 seconds (until fast blinking)			short beep
Swipe Installer Finger	x1	fast blinking	short + long beep

BACKLIGHT ON/OFF

Action	*Finger*	*Backlight*	*Buzzer Sound*
Swipe Installer Finger 4 times	x4	slow blinking	short beep
Wait 5 seconds (until fast blinking)			short beep
Swipe Installer Finger	x1	fast blinking	short + long beep

INSTALLER PROGRAMMING BLOCK DIAGRAM

Swipe the **Installer** Finger 1 to 4 times depending of the desired menu

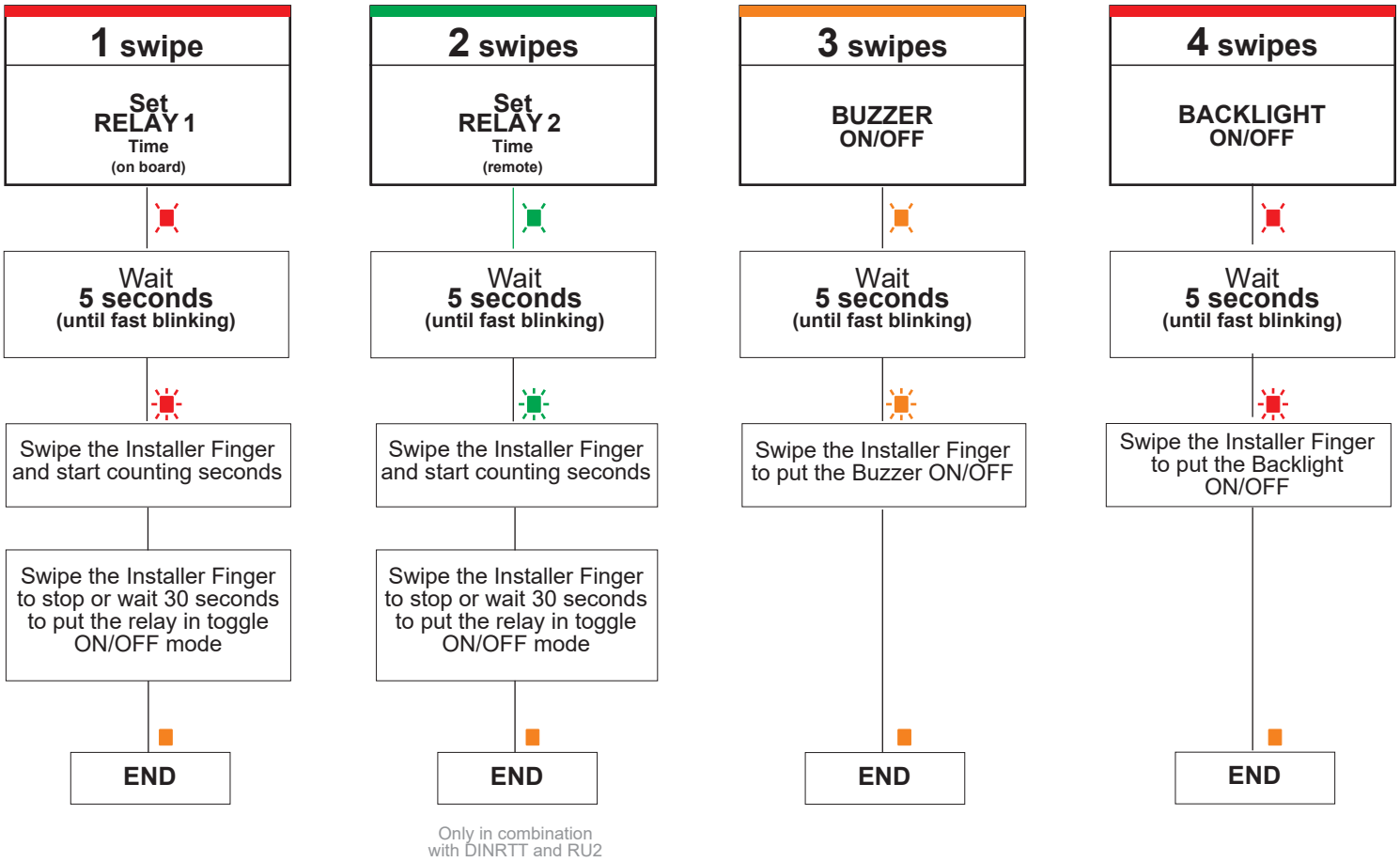

Only in combination with DINRTT and RU2

12. ADMINISTRATOR PROGRAMMING BY KEYPAD

Programming by keypad can be done only if the DINB100-SA V2 reader is connected to keypad DINPAD-M as shown in the pictures bellow. The connection is done by the cable provided with the biometric reader. Once connected, the keypad must be put in slave mode.

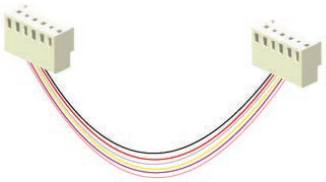

Connect both devices with the cable provided.

Put the keypad in slave mode:

Press B (3 seconds) + 000000
Press 0
Press 2
Press A to exit

Reset the device

Note: In some previous versions of our keypads, you can enter the menu only by pressing B + 000000. Please refer to the Keypad's Manual.

ADMINISTRATOR PROGRAMMING BY KEYPAD

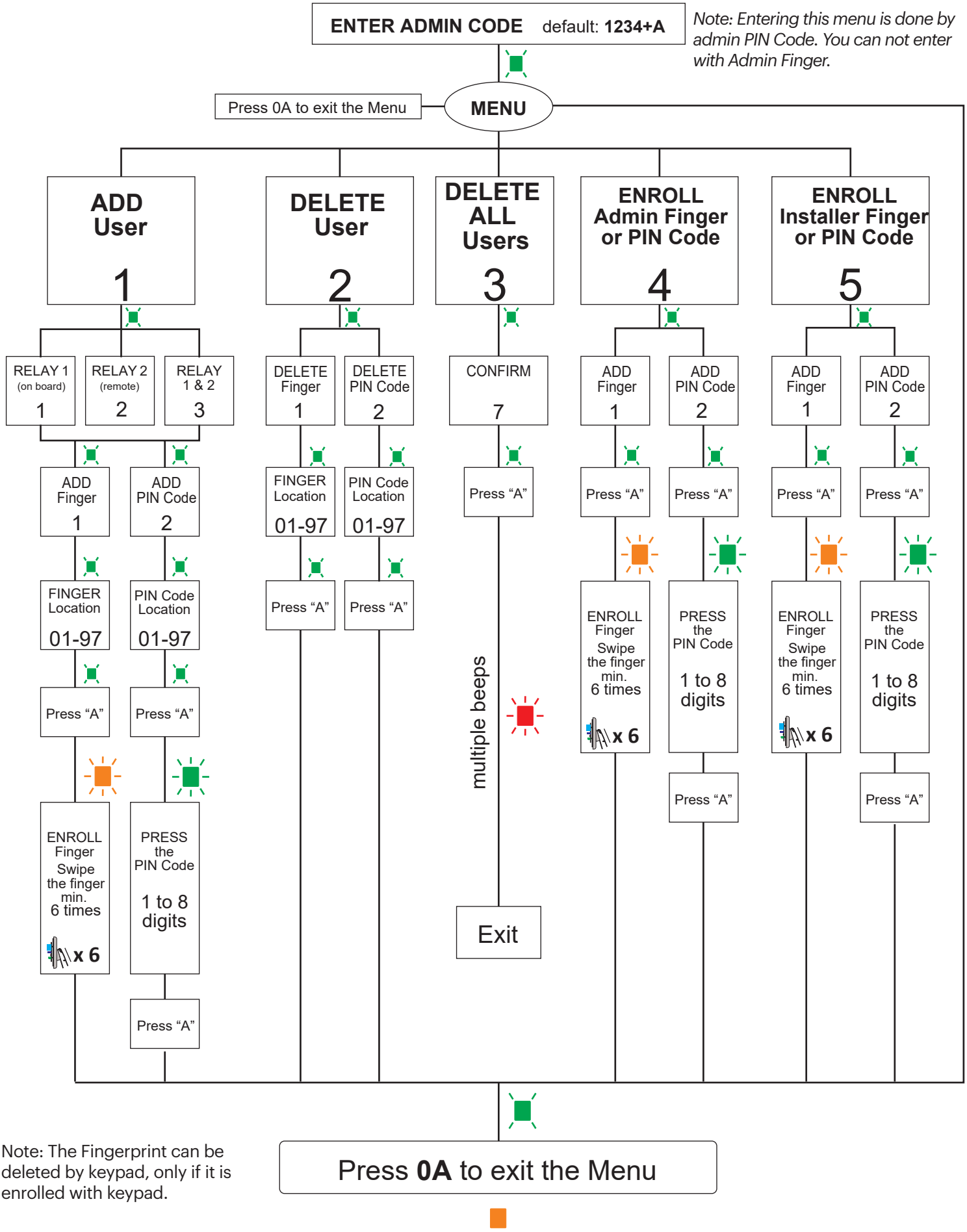

Note: The Fingerprint can be deleted by keypad, only if it is enrolled with keypad.

Example 1: Add user finger to Relay1 - Press 1234 + A + 1 + 1 + 1 + 01 + A + Enroll finger 6 times. 0A to exit.
Example 2: Add user PIN 147 to Relay2 - Press 1234 + A + 1 + 2 + 2 + 02 + A + 147 + A. 0A to exit.

13. INSTALLER PROGRAMMING BY KEYPAD

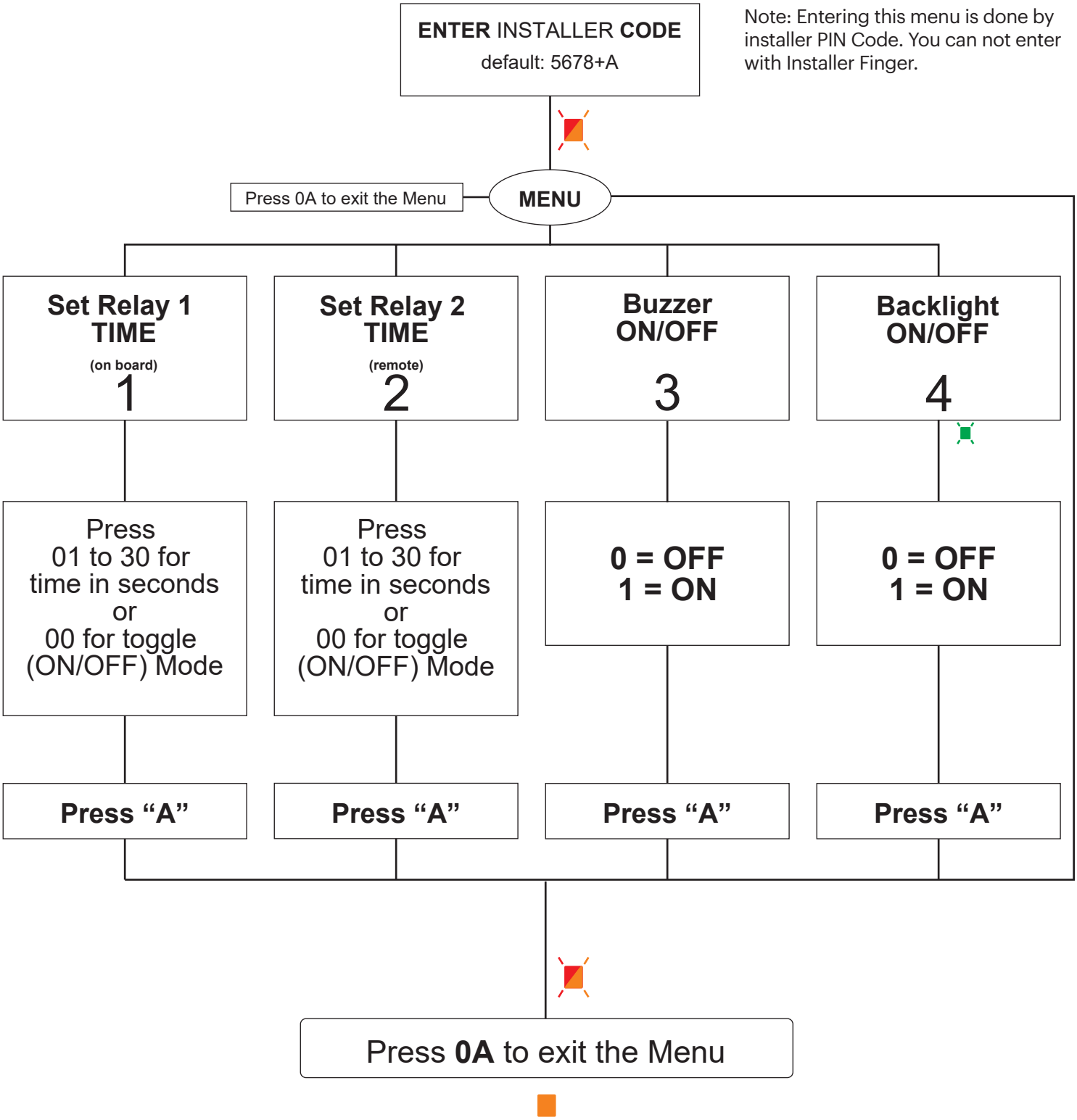

Example: *Change relay1 time to 2 seconds - 5678 + A + 1 + 02 + A.*

This product herewith complies with requirements of EMC directive 2014/30/EU. In addition it complies with RoHS2 directive EN50581:2012 and RoHS3 Directive 2015/863/EU.